PART NO.	TOLERANCES UNLESS SPECIFIED		
PS172	TWO PLACE DECIMALS +/- .015	THREE PLACE DECIMALS +/- .005	ANGLES +/- 1°

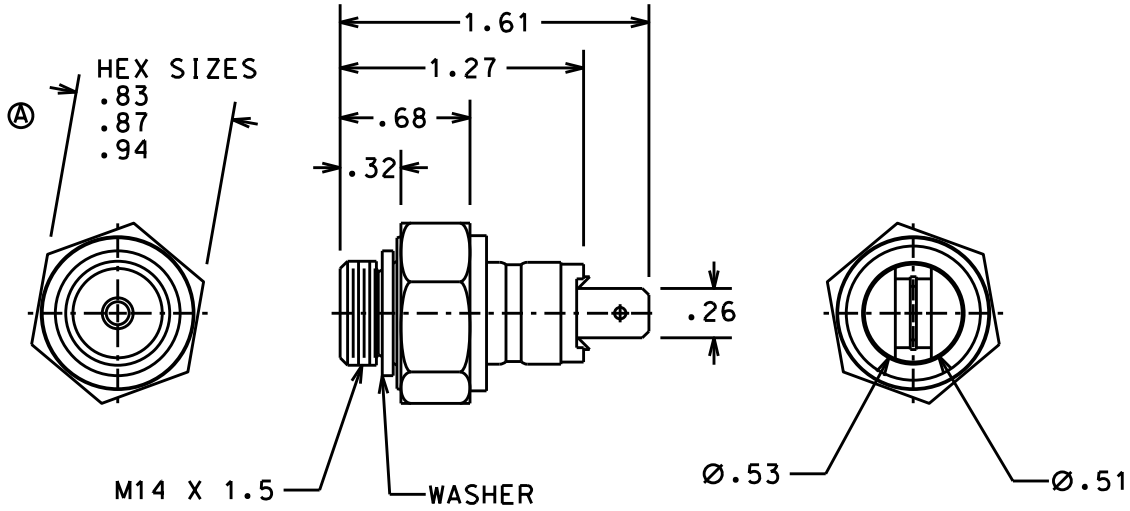

NOTES:

Ⓐ NORMALLY CLOSED CIRCUIT
OPEN @ 2- 6 PSI

REPLACE O.E. # 7701365430

L	REVISION	CN	DATE	BY
A	ADDED 2 MORE HEX SIZES 2-6 WAS 7.25 +/- 2.2	33095	3-10-10	KGS
	RELEASED	18770A	11-2-94	SJF

MATERIAL

FINISH

CAD REF.

SCALE	NTS		
DATE	11-2-94	DWN. BY	SJF
ENGINEER	11-2-94		DAL
APPROVED	11-2-94		JSK
PURCH. ■	PROD. □		
MODEL	PS172		

WELLS MANUFACTURING L.P.
FOND DU LAC, WISCONSIN

TITLE OIL PRESSURE SWITCH

PART NO. PS172